INQUIRY
COLLECTING FUNNEL ATB-G

Company		Contact person	
Street, No.		Phone	
ZIP		Mail	
City		Quantity (piece)	

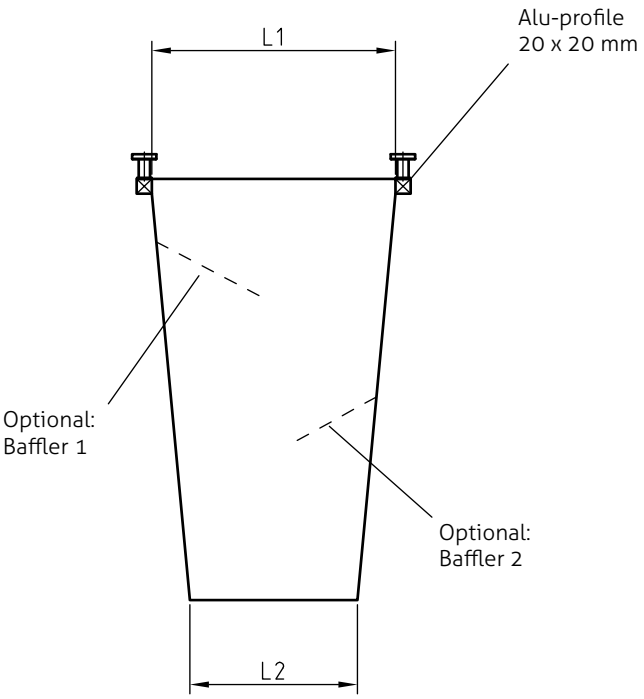

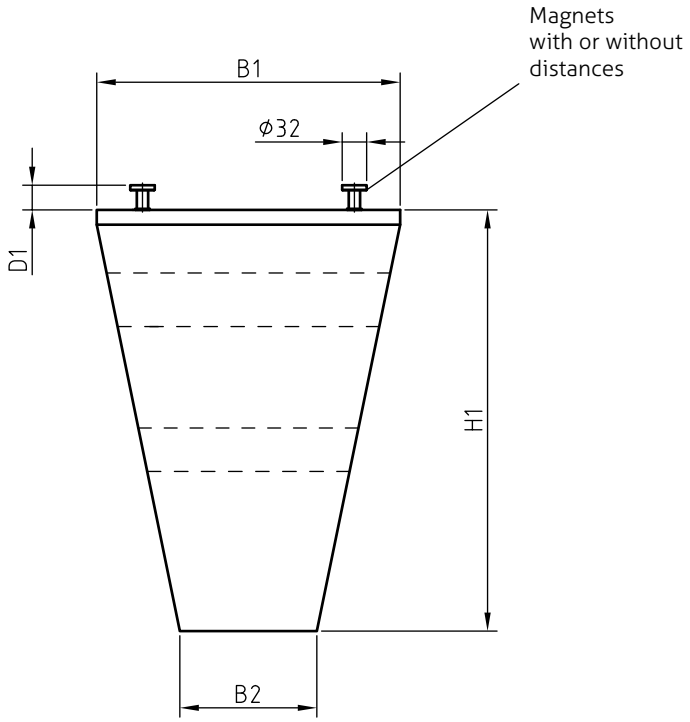

Width	B1=		mm
Width of runout	B2=		mm
Distance to the tool (min. 8 mm magnetheight)	D1=		mm
Height	H1=		mm
Length	L1=		mm
Length of runout	L2=		mm

Options:

- ☐ Baffler 1
- ☐ Baffler 2
- ☐ One side cut-out for conveyor (L-side)
- ☐ One side cut-out for conveyor (B-side)

Size of the moulded parts (L x W x H) _____ mm

Material:

- ☐ FM100.001 (PE, blue)
- ☐ FM100.003 (PVC, blue)
- ☐ FM100.005 (PP, white, FDA)
- ☐ FM100.002 (PVC, silver)
- ☐ FM100.004 (Kevlar, silver)
- ☐ FM100.006 (PBT, white)